Table type

Index	RG I T 250
Reducer	RGCT 250

● Standard specifications

Dimensions

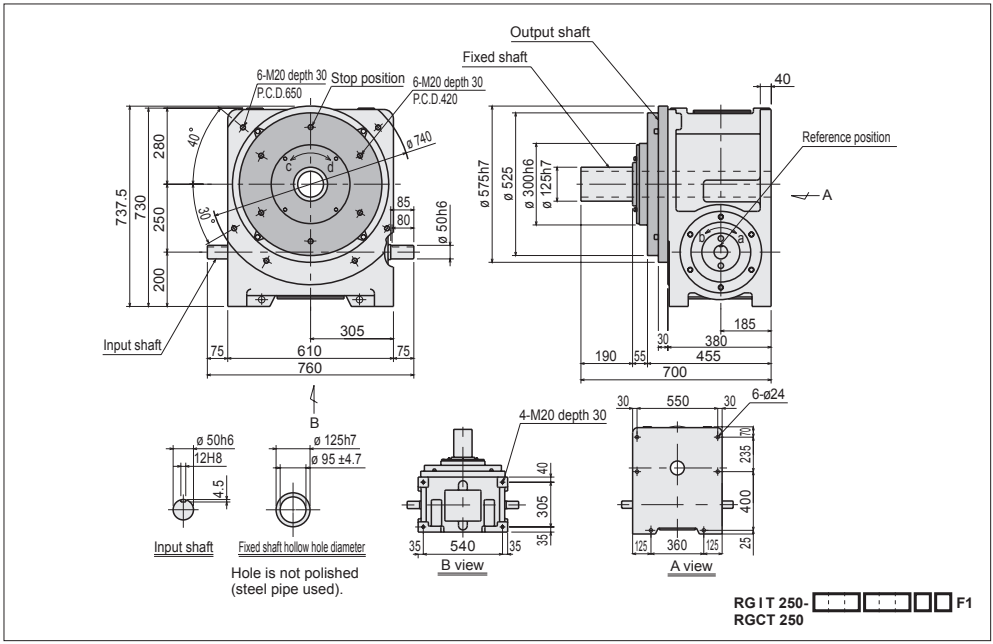

Installation position and oil supply/drain port and oil level gauge positions

Installation position	1
Series	**RGIT/RGCT**
Dimensions	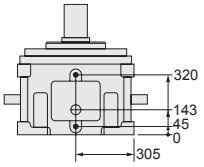

• Oil fill/drain port (Rc1)
○ Oil level gauge (ø 30)