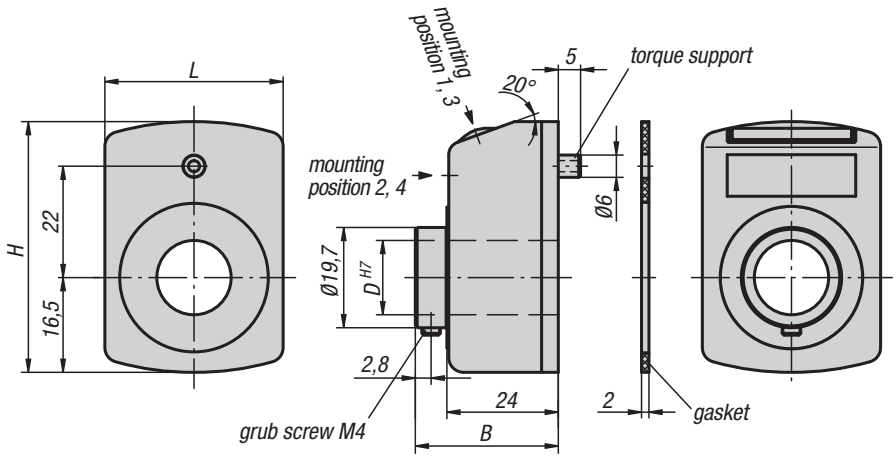

Display after one rotation, with decimal point:	Mounting position (1 - 4):
	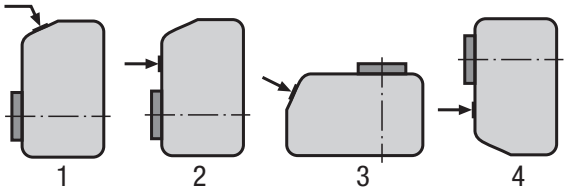
e. g. K2107.**01002**111 **0100** = 1 mm increments **2** = decimal places	e. g. K2107.01002**1**11 = mounting position **1**

Count direction (1 - 2):	Colour (1 - 2):
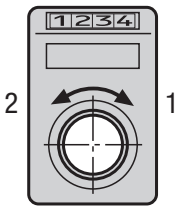	
e. g. K2107.01002**1**1 **1** = clockwise (ascending values) **2** = anticlockwise (ascending values)	e. g. K2107.0100211**1** **1** = orange **2** = black