Male stud connectors

Male thread: NPT thread, tapered
Threaded stud: ASME B1.20.1
Sealing type: Tapered thread
Sealing material: e.g. PTFE sealing tape

Tube coupling: VOSS *Lok* [40]

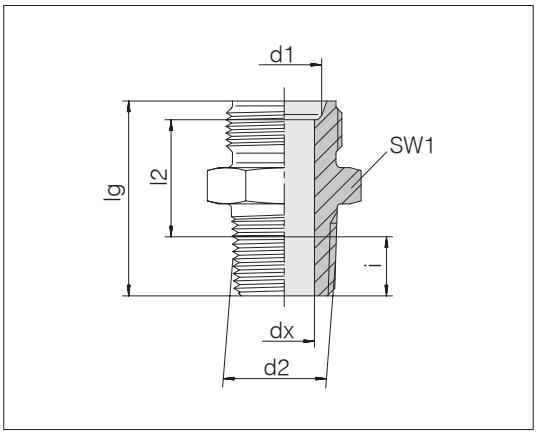

Tube OD d1	d2 NPT	dx	lg	l2 ca.	SW1	i ca.	kg/100 ca.	Order-No.	Designation
6	1/8 NPT	4.5	24.4	14.9	12	6.9	1.4	7001264700	40-SDS-6-N1/8T-SST
8	1/4 NPT	6.5	30.6	17.9	17	10	2.8	7001265000	40-SDS-8-N1/4T-SST
10	1/4 NPT	6.5	30.6	17.6	17	10	3.2	7001265300	40-SDS-10-N1/4T-SST
12	3/8 NPT	9.5	32.2	18.8	22	10.3	5.0	7001265600	40-SDS-12-N3/8T-SST
14	1/2 NPT	11.5	36.8	20	24	13.6	5.0	7001265900	40-SDS-14-N1/2T-SST
15	1/2 NPT	12	36.8	19.9	24	13.6	7.4	7001266200	40-SDS-15-N1/2T-SST
16	1/2 NPT	12	36.8	19.7	24	13.6	7.3	7001266500	40-SDS-16-N1/2T-SST
18	1/2 NPT	12	37.3	20.1	27	13.6	8.9	7001266800	40-SDS-18-N1/2T-SST
20	3/4 NPT	16	38.6	20.8	30	14.1	11.8	7001267100	40-SDS-20-N3/4T-SST
22	3/4 NPT	16	38.6	20.5	30	14.1	11.6	7001267400	40-SDS-22-N3/4T-SST

The screw depth i is subject to tolerance-related deviations.